A COMPARISON OF THREE TECHNIQUES OF DISCHARGING SATELLITES

H. A. Cohen and A. L. Chesley
Air Force Geophysics Laboratory

T. Aggson
NASA Goddard Space Flight Center

M. S. Gussenhoven
Boston College

R. C. Olsen and E. Whipple
University of California, San Diego

SUMMARY

Three techniques of discharging satellites were used on the P78-2 satellite in April, 1979. The three techniques were the ejection of a beam of electrons from an electron gun; the emission of electrons from a heated, biased filament; and the ejection of a plasma containing energetic positive xenon ions and low energy electrons. On April 22, 1979 when the P78-2 satellite ground-to-plasma potential difference reached several hundred volts, each of the three techniques was able to completely discharge the satellite. The comparative effectiveness of the techniques were clearly shown on this day. On April 24, 1979 the satellite charged to -8 kV upon entering eclipse. The electron gun, emitting 1 mA of electrons with 150 eV energy, reduced the difference in potential between satellite ground and the ambient plasma to -1 kV, but could not completely discharge the satellite. The plasma source completely discharged the satellite.

Spacecraft charging at geosynchronous altitude is caused by the accumulation of negative charge due to high energy electrons (ref. 1). Therefore a method of ejecting electrons should be used on satellites in order to discharge the spacecraft. There are several different techniques of ejecting electrons from space vehicles, with comparative advantages and disadvantages for each. The use of the SC4 payloads on the P78-2 satellite presented the opportunity to compare three techniques: a heated wire, an electron gun, and a plasma source.

The heated wire is attractive as an electron emitter because it is simple, can be placed nearly anywhere on the spacecraft, and no high voltages are required. The disadvantage of this type of emission device became evident during its first use on the ATS-5 satellite (ref. 2). That particular unit had not been specifically designed for the purpose of dis-

charging the spacecraft but was used for that purpose on a number of occasions. When heated and allowed to emit electrons, the wire discharged the spacecraft either completely or almost completely. However, this was sometimes a transient phenomenon, and in this case the spacecraft would return to a highly charged state even though the wire was continuously heated. Two possibilities have been proposed for this sequence of events: 1) a local space charge builds up around the wire cutting off electron flow from the wire to the ambient plasma, or 2) a negative potential well exists outside the satellite such that "electrons must be ejected at sufficient energy to overcome the potential barrier surrounding the spacecraft in order to discharge it completely" (ref. 2).

Although the SC4-2 payload on the P78-2 satellite was intended primarily to eject beams of ions or a plasma of ions and electrons, the unit was designed so that the heated wire neutralizer could also be used as an electron emitter. A schematic of the neutralizer circuitry is shown in figure 1. The heater temperature was controlled in order to limit the electron emission to discrete values from 8×10^{-6} A to 2×10^{-3} A which could be commanded from the ground. The bias on the wire could be set to ± 0, 10, 25, 100, 500, or 1000 V (with respect to spacecraft frame).

To overcome the local space charge problem created by a bare heated filament, an electron emission system using a triode electron gun was also flown on the P78-2 satellite. Figure 2 is a schematic of this system. This payload, labeled SC4-1, was capable of ejecting electrons in discrete current steps from 1×10^{-6} A to 1.3×10^{-2} A, with energies from 50 V to 3×10^{3} V. The triode gun was a copy of a proven design which had been used successfully on rocket flights for over a decade (ref. 3).

One of the primary concerns in the initial design of SC4-1 was the economy of power and weight. A great deal of effort was expended in order to produce a small, lightweight package that would use only a small amount of power in generating the required dynamic range of currents and energies. Because of this requirement, the triode gun uses an oxide-coated cathode. This requires little power to heat to thermal emission, but is easily poisoned. In the laboratory it was observed that exposure to oxygen or water vapor (partial pressures of greater than 2×10^{-6} Torr) seriously poisoned the cathode in time periods on the order of minutes.

The gun was therefore sent aloft in a closed container. The container was not opened until the satellite had been in orbit for about a month to allow for outgassing from the satellite. The gun was operated when the container cap was first opened and again four hours later that day. No signs of poisoning were evident in the first days of operating the SC4-1 payload.

One result which had a serious effect on determining operation plans for the period April 22 to 24 was the unanticipated havoc created by the use of the electron gun in emitting 6 mA at 3 keV during March 30, 1979. These results have been reported in a previous paper at this conference ("P78-2 Satellite and Payload Responses to Electron Beam Operations on

March 30, 1979," Cohen et al.) Although it would have been useful to operate the electron gun over the full dynamic range available, due to these effects it was decided to limit the current and energy to a maximum of 1 mA at 0.15 keV.

A plasma source ejects a mixture of positively charged ions, electrons, and neutrals. Such a source had been quite successfully used on the ATS-6 satellite to discharge the spacecraft (ref. 2). Figure 3 is a schematic of the SC4-2 payload configured as a plasma source. In addition to the electron currents previously mentioned for the heater, SC4-2 was designed to eject ion currents of $3x10^{-4}$ A to $2x10^{-3}$ A, with energies of 1 and 2 keV. Ion, electron, and net currents flowing from the SC4-2 could be independently varied and measured. The original basis for using the plasma source was that it was expected to act like a low impedance connection from the spacecraft to the plasma, allowing a flow of either electrons or ions, as required. Because the plasma contains almost equal numbers of ions and electrons, it is both impervious to any electrical potential barriers around the spacecraft, and is not limited by space charge restraints in the beam itself.

The different discharge systems were used on the same satellite for the first time in April 1979, when the satellite was charged to an average potential of -380 V during an eclipse period. As shown in table 1, 10 μA of electrons emitted at either 50 or 150 eV from SC4-1 reduced the potential to -170 V but did not completely discharge the spacecraft. Raising the ejected current to 100 μA completely discharged the spacecraft when 50 eV electrons were used, and even drove the spacecraft slightly positive when the energy of the ejected electrons was increased to 150 eV.

The electron gun (SC4-1) was turned off and the heated wire neutralizer on SC4-2 was started. Currents of 8, 20, 300, and 1000 μA were used with a bias of -10 V (with respect to spacecraft frame). As shown in table 2, there was no substantial decrease in spacecraft charging when electrons were ejected with this energy. But when 100 eV electrons were used, the change in spacecraft charging depended monotonically on the current ejected. The plasma source was now turned on, combining the ejected electrons with energetic ions. Previously, 1 mA of 10 eV electrons had little effect on discharging the satellite; however, these electrons, when combined with the 1 mA of 1 keV positive xenon ions, completely discharged the satellite. Reducing both the ion and electron currents to $3x10^{-4}$ A kept the spacecraft completely discharged during the plasma use.

The vehicle charged to -8 kV during the eclipse period of April 24, 1979. Electrons of 50 eV (ejected from SC4-1) had the effect of reducing the vehicle potential from -8 kV to -3 kV, independent of the current used (10, 100, or 1000 μA). Increasing the energy of the electrons to 150 V had the effect of reducing the vehicle charging with higher currents (the vehicle remained near -2 kV with respect to the plasma). Using the plasma source, with electron ejection on the order of 1 mA, completely discharged the spacecraft frame, even with a positive ion ejection as low as 100 μA.

What is important here is that the vehicle did not swing significantly positive when this large electron current (combined with a small flow of positive ions) was used.

The conclusion that can be drawn from these operations is that a plasma source represents the best way of discharging spacecraft in geosynchronous orbit.

REFERENCES

1. DeForest, S. E., Spacecraft Charging at Synchronous Orbit, J. of Geophys. Res., 77, p. 651, 1972.

2. Goldstein, R., and S.E. DeForest, Active Control of Spacecraft Potentials at Geosynchronous Orbit, Spacecraft Charging by Magnetospheric Plasmas, Progress in Astronautics and Aeronautics, 47, A. Rosen, Ed., 1976.

3. Hess, W. N., M.C. Trichel, T.N. Davis, William C. Beggs, George E. Kraft, E. Stassinopoulos, and E.J. Maier, Artificial Aurora Experiment: Experiment and Principal Results, J. Geophys. Res., 76, 6067, 1971.

TABLE 1

Discharge of Spacecraft Using SC4-1 April 22, 1979

SC4-1 Mode #	Emitted Current Ib (mA)	Electron Energy Eb (volts)	Vehicle Potential Vsc (10^2 volts)
1	.01	50	-170 ± 20
2	.01	150	-170 ± 20
3	.1	50	$10 < Vsc < 50$
4	.1	150	$10 < Vsc < 150$

(Average Spacecraft Potential was 380 volts just before and immediately after SC4-1 operation.)

TABLE 2

Neutralizer Filament Discharge of P78-2 (April 22, 1979)

I_F (mA)	$-V_{SC}$ (10^3 Volts) Filament Bias E_{FE} = -10 V	Filament Bias E_F = 100 V
0.008	0.37	0.3
0.02	0.4	0.15
0.3	0.5	0.07
1.	0.3	--

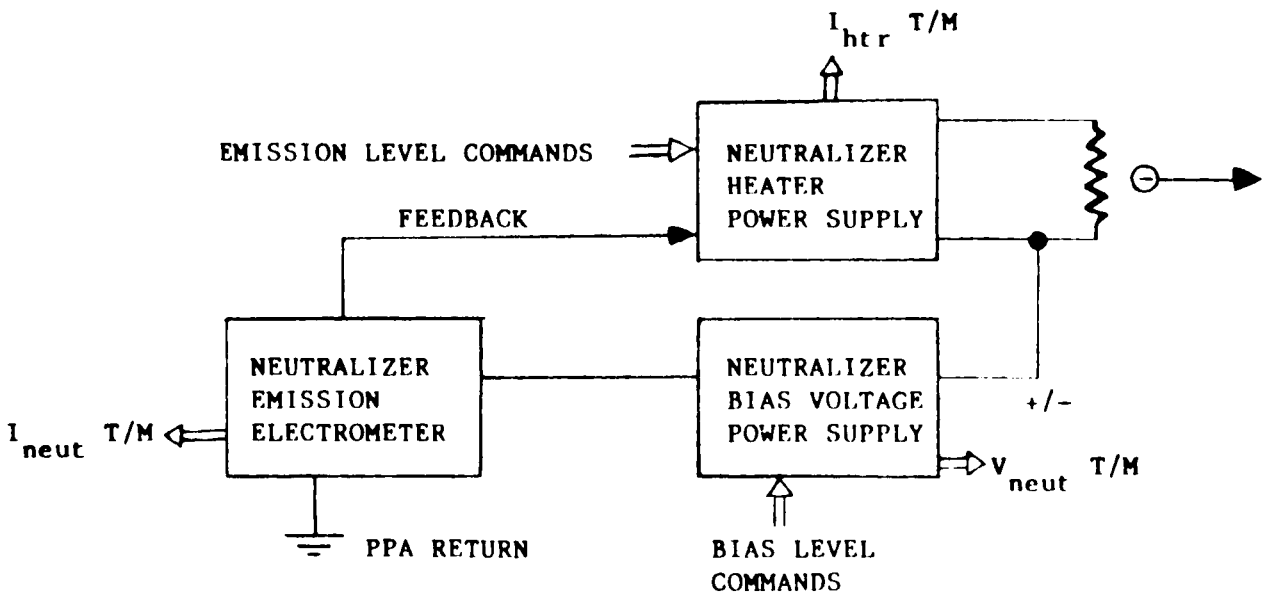

Figure 1 Schematic of Neutralizer Circuitry

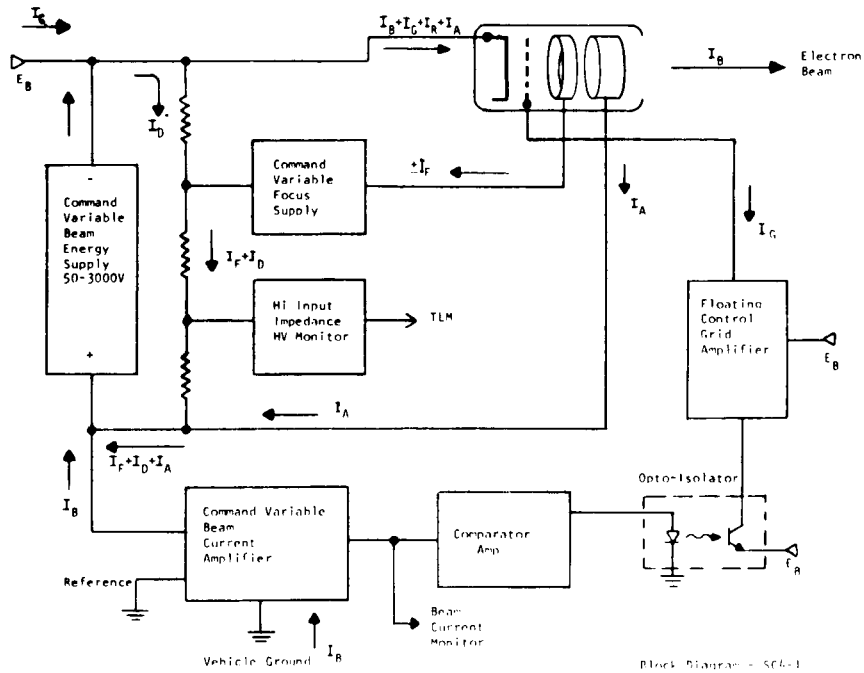

Figure 2 Schematic of Electron Gun

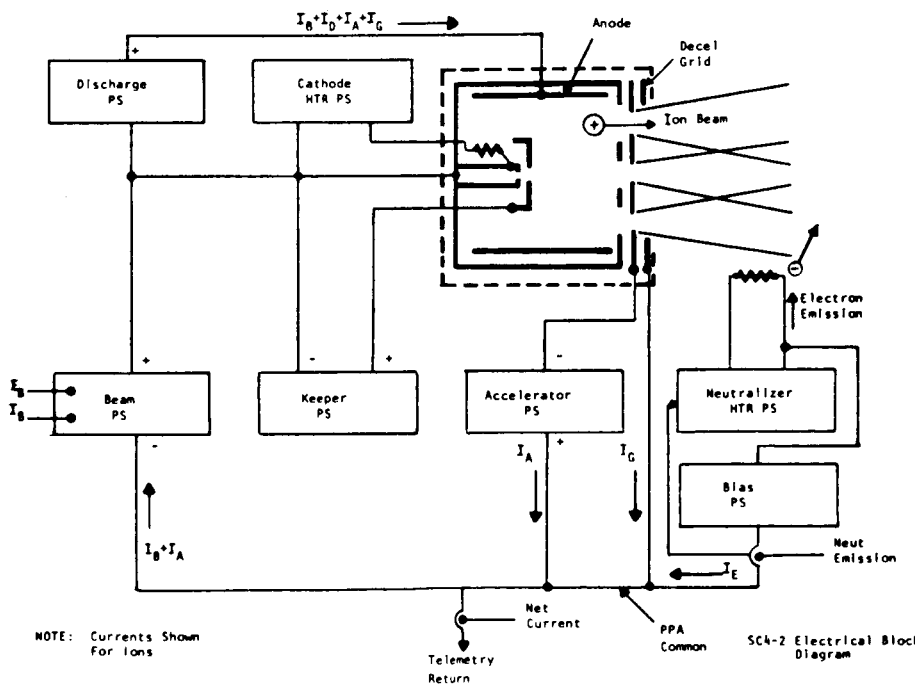

Figure 3 Schematic of Plasma Source